INSTALLATION GUIDANCE

EASY brushed stainless steel linear grab bar 400 mm

B&M SKU: ID12000IS-40 Idral code: 12000IS-40

Installation sequence

1 Confirm the exact length, orientation and fixing dimensions in the technical specification before marking the wall.

2 Fix the bar only to a sound supporting structure suitable for the loads stated in the technical specification.

3 Select suitable anchors for the wall construction. Do not assume that wall or floor anchors are supplied.

4 Assemble the mounting components as shown in the Idral instructions and secure every fixing point.

5 Check stability before use. For folding models, verify free movement and adequate clearance through the complete folding range.

Important

For wall-mounted bars, follow Idral's mounting arrangement for the relevant 30 mm or 32 mm tube system. The model-specific technical sheet remains the dimensional reference.

INSTALLATION GUIDANCE

EASY brushed stainless steel linear grab bar 400 mm

B&M SKU: ID12000IS-40 Idral code: 12000IS-40

Idral assembly details

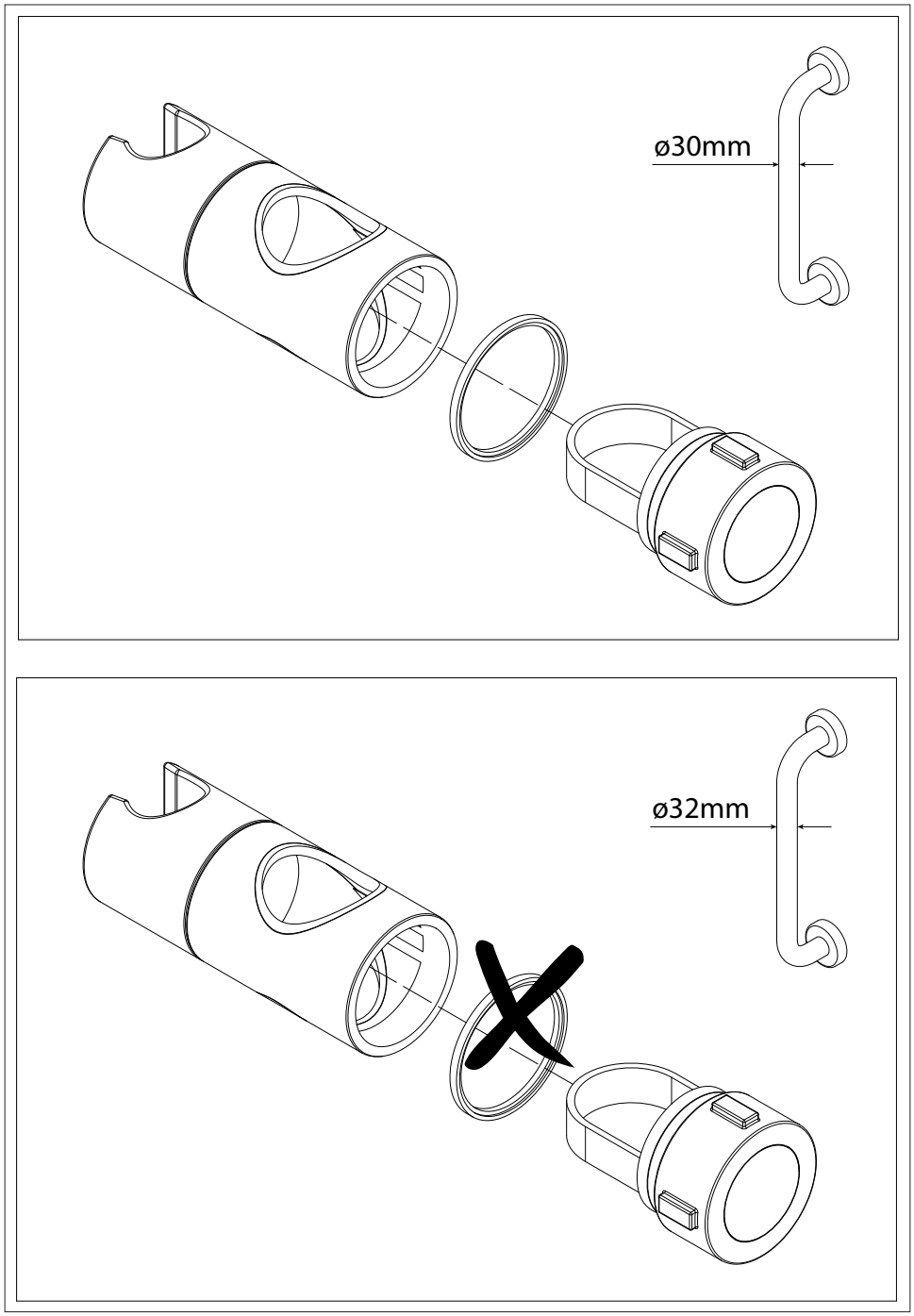

Source: Idral ISTA28-01 / page 3